Auto-Test™ Doors
Type FD10-ST FS Motor Operated Automatic Resetting Counter Fire Door with Frame
Stainless Steel Finish - Between Jamb Mounted – Central Alarm or Smoke Detector Activated - Wall Thickness 4 7/8”

1.0 GENERAL
- 1.1 Summary
  - A. All Integral Frame Rolling Counter Fire Doors shall be as manufactured by The Cookson Company, Phoenix, Arizona. Furnished materials shall include all curtains, bottom bars, guides, brackets, hoods, frame, operating mechanisms and any special features.
  - B. Work not to be included by The Cookson Company includes design of, material for and preparation of door openings but not limited to structural or miscellaneous iron work, access panels, and finish painting. Countertops will not be provided by The Cookson Company.
- 1.2 Quality Assurance
  - A. All Integral Frame Rolling Counter Fire Doors shall be constructed in accordance with an approved testing agencies requirements and shall bear a 1-1/2 hour rating label.

2.0 PRODUCTS
- 2.1 Materials
  - A. The door curtain shall be constructed of interconnected strip stainless steel slats conforming to ASTM A-653. The curtain shall be constructed of 22 gauge No. 10 (1-1/4” high by 3/8” deep) slats as designated by The Cookson Company.
  - B. The finish on the door curtain shall be #4 polish.
  - C. The bottom bar shall be constructed of tubular stainless steel measuring 2” high by 1-1/4” deep. The finish on the bottom bar shall be #4 polish.
  - D. The integral door frame and guides shall be constructed of 16 gauge stainless steel at the head and jambs. All frame joints shall be flush and smooth. The finish on the integral frame (head and jambs) shall be #4.
  - E. The brackets shall be constructed of 11 gauge steel plate. The finish on the brackets shall be factory applied Thermosetting Gray ColorCote applied with a minimum thickness of 2 mils.
  - F. The barrel shall be steel tubing of not less than 4” in diameter. Oil tempered torsion springs shall be capable of counter balancing the weight of the curtain while allowing for automatic gravity closing. The barrel shall be designed to limit the maximum deflection to .03” per foot of opening width. The springs shall be adjusted by means of an exterior wheel. The barrel shall be unpainted.
  - G. The hood shall be fabricated from 24 gauge stainless steel and shall be formed to fit the curvature of the brackets. The hood shall receive a #4 finish.
  - H. Motor Cover shall be fabricated from 24 gauge stainless steel and shall interconnect with the hood and endplate brackets. The motor cover shall receive a #4 finish.
  - I. Smoke Seals:
    1. Bottom Bar Motor Operated Units: Combination smoke seal/sensing edge.
    2. Guides and Head: Replaceable, UL Listed, nylon pile smoke seals sealing against fascia side of curtain.
  - J. Locking: Through motor operator gearing and key control station. No bottom bar locking or interlocks required.

2.2 Operation

A. Counter fire doors shall have model FS, motor operator, UL listed and FM approved, NEMA 1 enclosure rating, horsepower as recommended by manufacturer, [115v single] [230v single] [208/230v three] [460v three] phase service. Provide open drip-proof motor, removable without affecting setting of limit switches; UL listed thermal overload protection; maintenance free solenoid actuated brake; planetary reduction gearing and adjustable rotary limit switch mechanism; transformer with 24 v control secondary; and all integral electrical components prewired to terminal blocks.

a. Power down automatic closure shall be activated by [Central alarm system] [Local smoke and heat detectors]. Connection of alarm shall terminate at a terminal strip within the motor operator control panel. Doors shall not require a separate releasing device for alarm signal or power outage automatic closing activation.

b. Doors shall maintain a closing speed of not more than 9” per second for power down or automatic gravity closing. When power down automatic closure is activated, electric sensing edge and push button shall remain operable.

c. Doors shall be fail-safe and close upon complete loss of power to the operators in excess of 10 seconds.

d. Resetting of spring tension or mechanical dropouts shall not be required. Upon restoration of power and/or clearing of the alarm signal, doors shall immediately reset by opening with the electric control station.

e. The electrical contractor shall mount the control station(s) and supply the appropriate disconnect switch, all conduit and wiring per the overhead door wiring instructions.

1. Control Station: Flush mounted, "Open/Close/Stop" push buttons; NEMA 1B.

OR

1. Control Station: Flush mounted, "Open/Close" key switch with "Stop" push button; NEMA 1B.

B. Entrapment Protection: Provide the following primary entrapment protection device to enable momentary contact close and alarm power down operation.

a. Provide a 2-wire, E.L.R. electric sensing/weather edge seal extending full width of door bottom bar. Contact before door fully closes shall cause door to immediately stop downward travel and reverse direction to the fully opened position during normal close activation, and to stop the door upon meeting an obstruction during power down alarm activation closing. Provide a retracting safety cord and reel (reelite) connection to control circuit.

3.0 EXECUTION

3.1 Installation

A. All Cookson Integral Frame Rolling Counter Fire Doors shall be installed in accordance with NFPA Bulletin 80 by an authorized Cookson Distributor.

3.2 Warranty

A. All Cookson Integral Frame Rolling Counter Fire Doors shall be warranted for a period of 2 years from the time of shipment against defects in workmanship and materials.

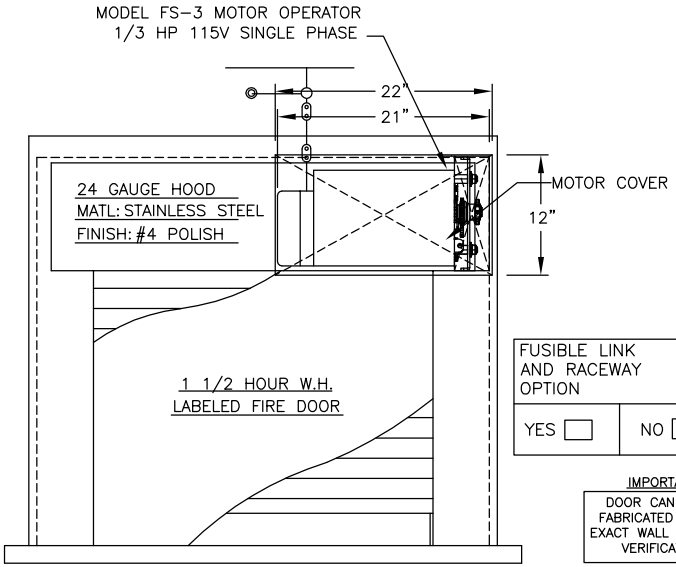

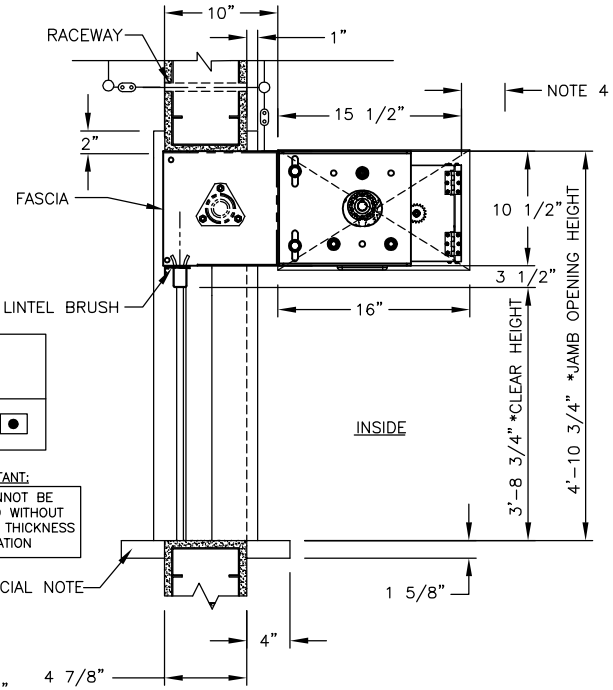

FUSIBLE LINK AND RACEWAY OPTION	
YES ☐	NO ●

IMPORTANT:
DOOR CANNOT BE FABRICATED WITHOUT EXACT WALL THICKNESS VERIFICATION

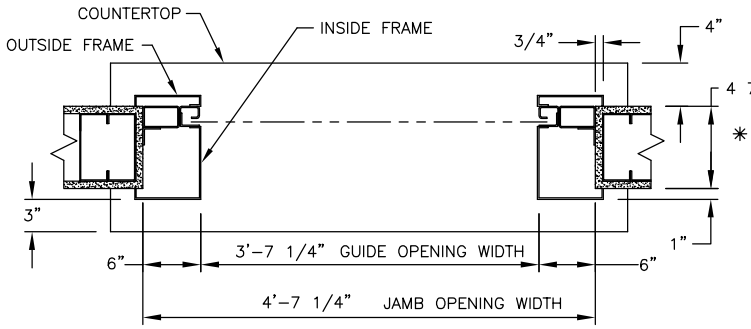

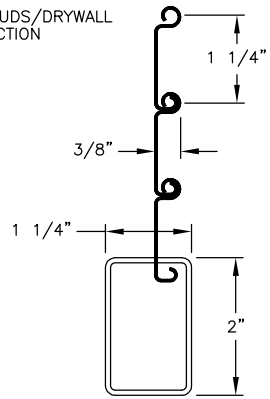

SLAT DETAIL: #10-22GA
MAT'L: STAINLESS STEEL
FINISH: #4 POLISH

BOTTOM BAR DETAIL
MAT'L: STAINLESS STEEL
FINISH: #4 POLISH

BOTTOM BAR LOCK			
TYPE	OPERATION		
	IN	OUT	BOTH
STD CYLINDER	●	☐	☐

SPECIAL NOTE: NFPA 80 REQUIRES A LABELED AND LISTED FIRE COUNTER TOP. PRIOR TO INSTALLING FIRE DOOR, OBTAIN AHJ APPROVAL FOR USE OF A COUNTER TOP THAT IS NOT LABELED.

NOTES:
1. GENERAL SPECIFICATIONS SEE SHEET 1.
2. APPROX. WT. OF DOOR IS 551 LBS.
3. THE COOKSON COMPANY ASSUMES THAT THE FIRE DOOR(S), THE WALL AND/OR MOUNTING CONDITIONS, ALONG WITH THE FASTENERS USED IN ATTACHING THE DOOR(S) TO THE STRUCTURE MEET WITH THE "AUTHORITY HAVING JURISDICTION'S" APPROVAL. FOR FURTHER REFERENCE CONSULT N.F.P.A. BULLETIN 80.
4. PROVIDE ADEQUATE CLEARANCE FOR WIRING.

ELECTRICAL INFORMATION	
CONTROLLER NEMA 1	
CONTROL STATION NEMA 1	
PUSH BUTTON ●	SURFACE MTD ●
KEY STATION ☐	FLUSH MTD ☐

MATERIAL		
OUTSIDE FRAME INSIDE FRAME	16GA S.S.	
COUNTER TOP	14GA S.S. ☐	BY OTHERS ●

DIMENSIONS AND CLEARANCES AS NOTED BY ASTERISK (✳) MUST BE FIELD CHECKED.

VERIFIED BY: _____ ON: _____

MAKE	HAND	ARCH. MARK	COOKSON MARK
1	AS SHOWN	1332A	R3
	OPPOSITE		

NO.	BY	DATE	REVISION
3			
2			
1			
	RW	02/12/13	ORIGINAL DRAWING

COOKSON® ROLLING DOORS

JOB:
CONTRACTOR:
ARCHITECT:
DISTRIBUTOR: ABC DOORS – HOUSTON

FD10-ST || CTR FIRE DOOR W/SILL & TRIM || AUTO TEST MTR || UNDER 8" WALL

DRAWING NO. PRELIMINARY